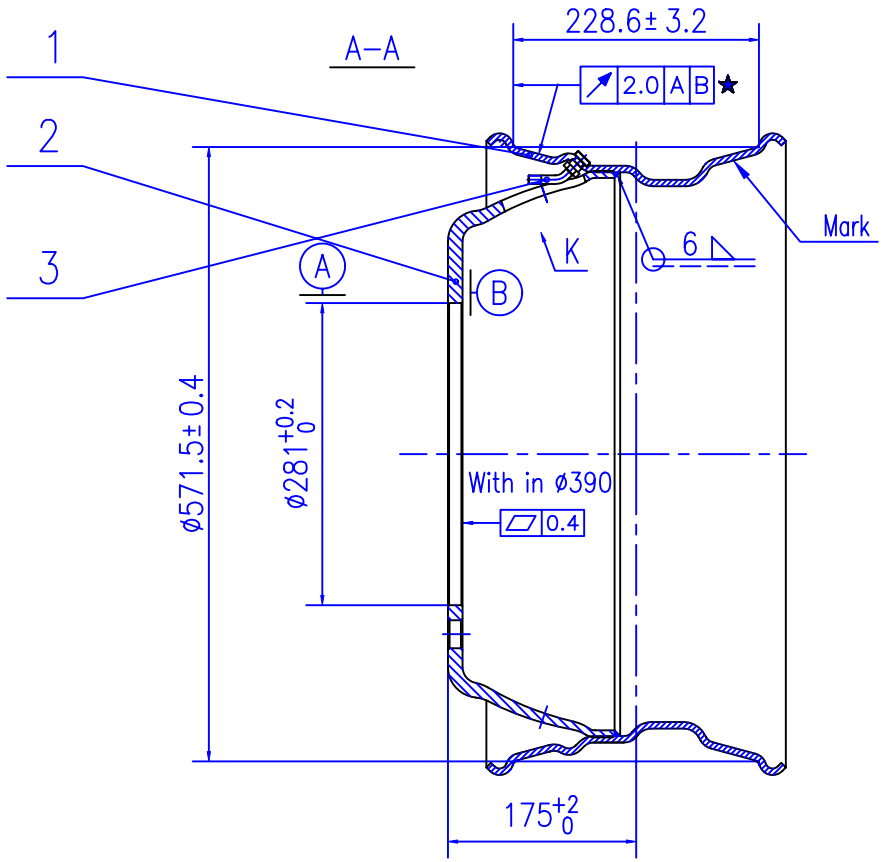

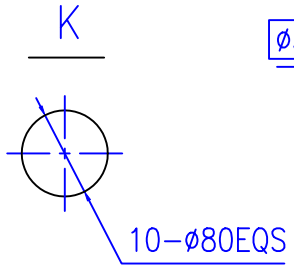

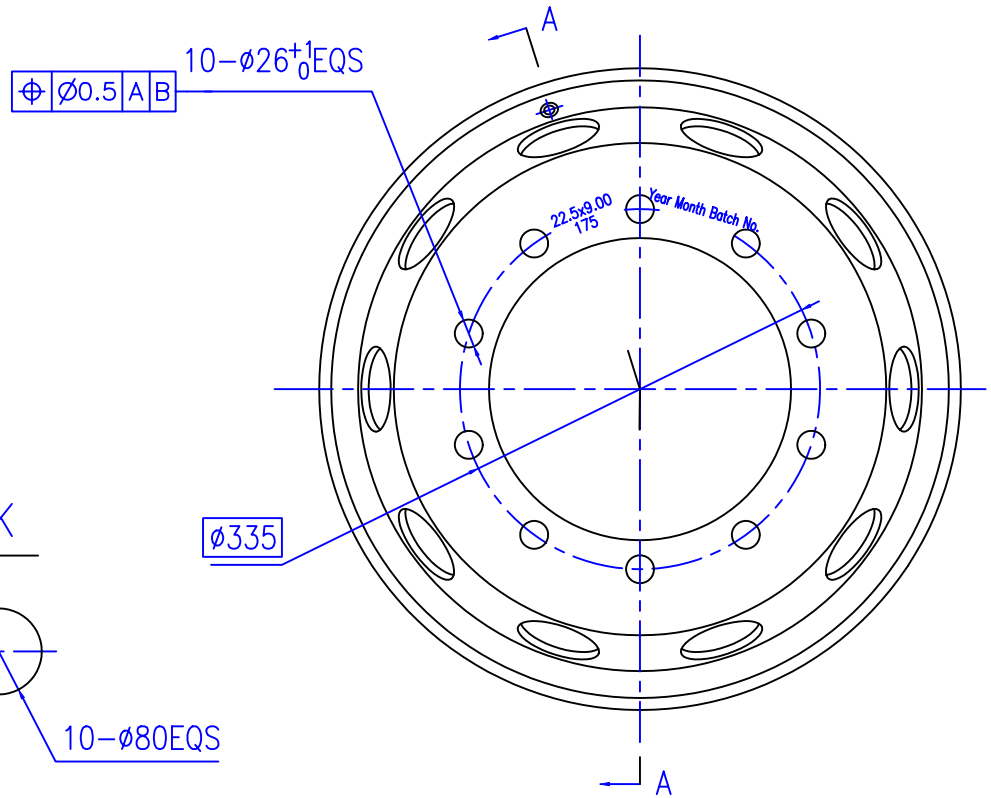

Technical require

1.Rim profile according to ETRTO;
2.Painting: comply with TQ4 QC/T484–1999; E–coat basis,top coat with customer's requirement;;
3.The offset angle between valve aperture and rim welding line is ≥120° ;
4.Weld require:high–strength,even,smooth,deep penetration;without any other welding defects occured;
5.Valve aperture and rim flange keep clean,smooth,without burrs or other dirts;
6.Mark: 22.5×9.00 Year Month Batch No. shift No.;
7.Dynamic imbalance load is not more than 2800g.cm;
8.Load:4000Kg
Test standard:EUWA
Test load:cornering:30870N.m minimum cycle times:250,000 ★
radial:8800Kg minimum cycle times:500,000★

number	description	drawing	quantity	material	remark
3	valve	58MS	1		
2	disc	LT2573D-02	1	BG380CL δ13.5	
1	rim	LT2573E-01	1	SW400 δ6.25	

标记	处数	更改文件号	签 字	日 期

设 计		标准化	
校 对		批 准	
审 核			
工 艺		日 期	

part No. 22.5x9.00 (P=175)

DRAWING NO. :LT2573E-00

OEM NO. :

图样标记	数 量	重 量	比 例
			1:7.5

共 页 第 页

SINO–TEX WHEEL MANUFACTURES INC.